Team 5 – Boston University

Final Hardware Review

June 3, 2009

Final Schematics

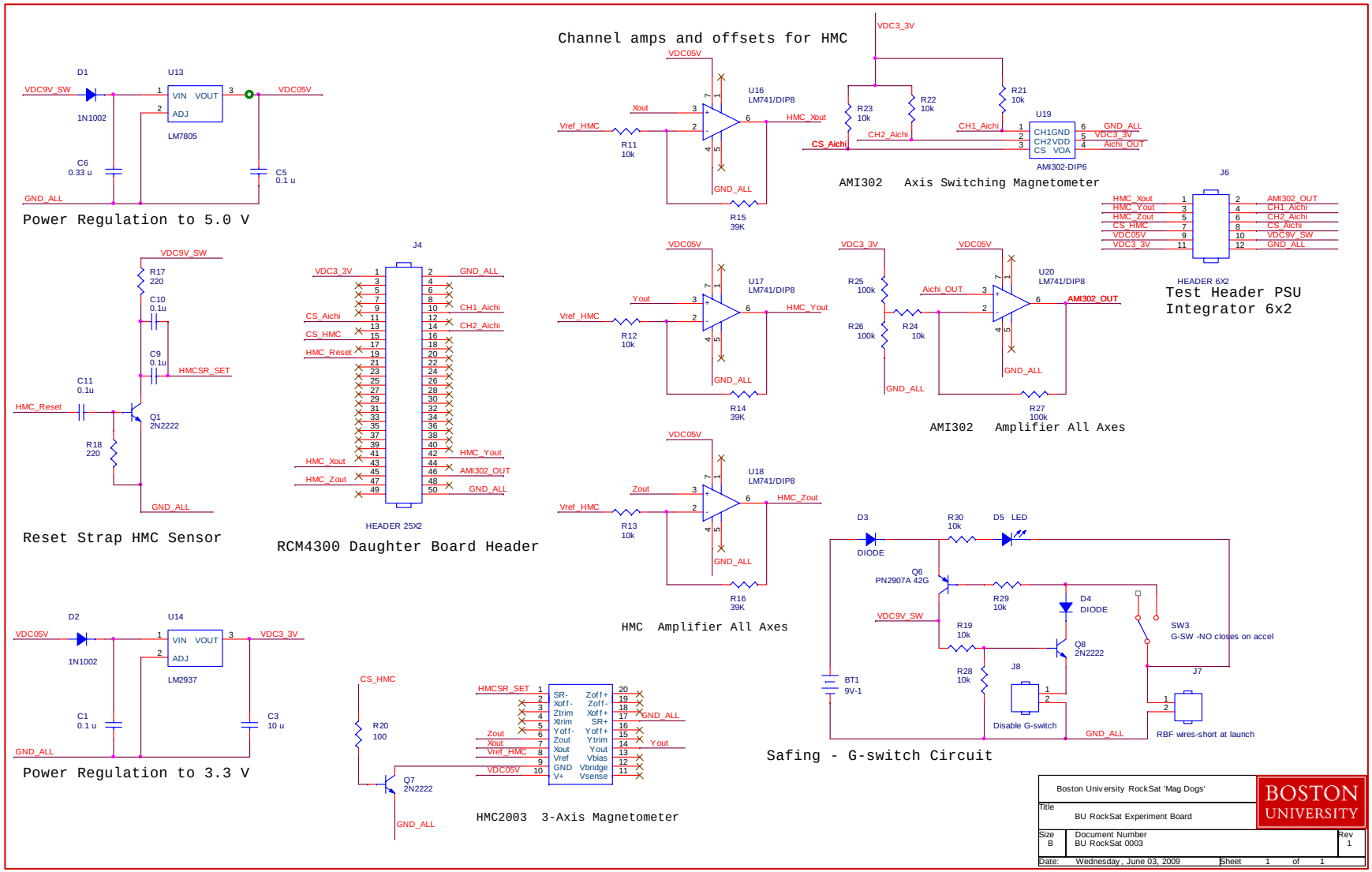

Final PCB Layout v2.0

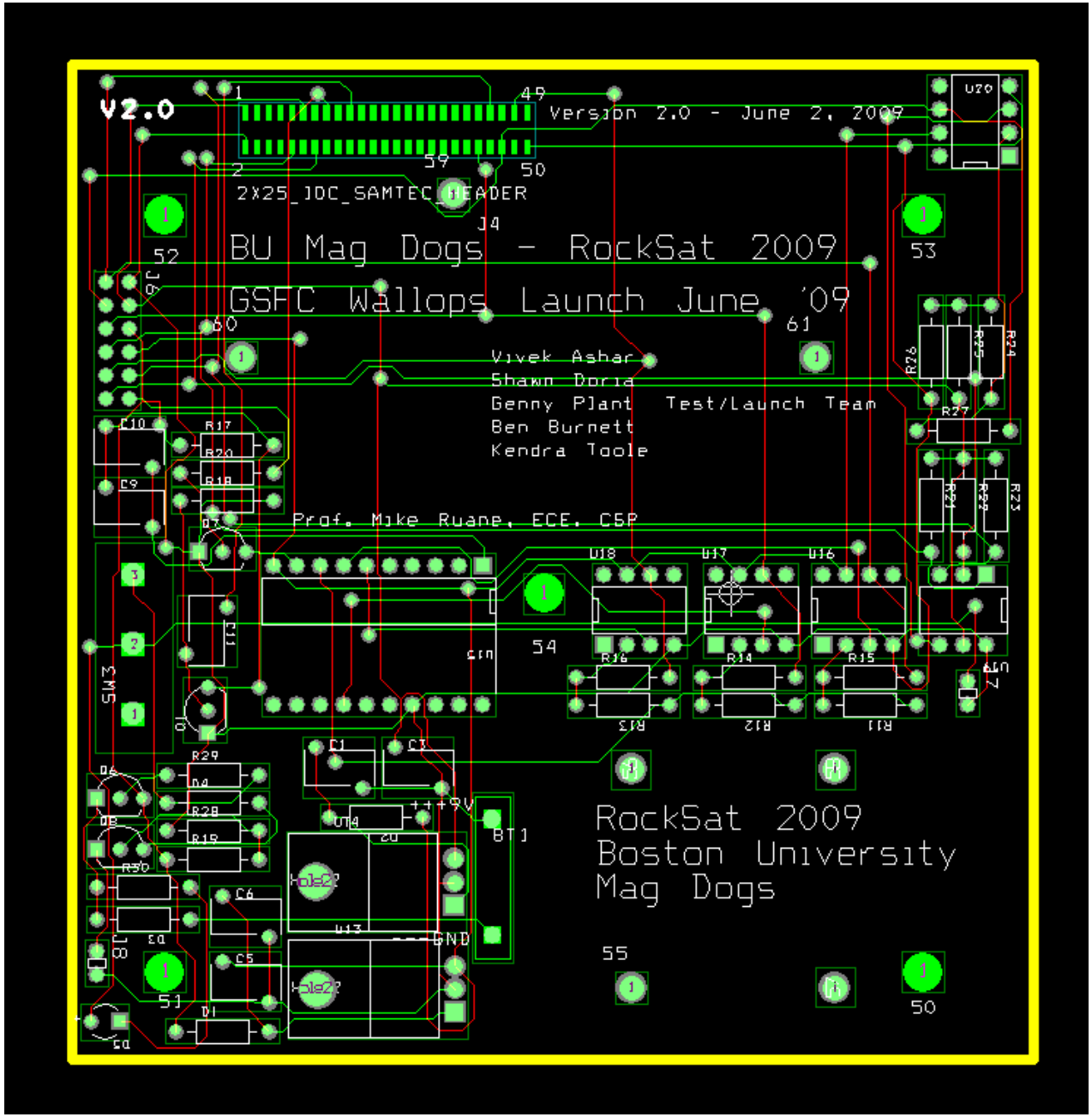

Final Mechanical Drawings

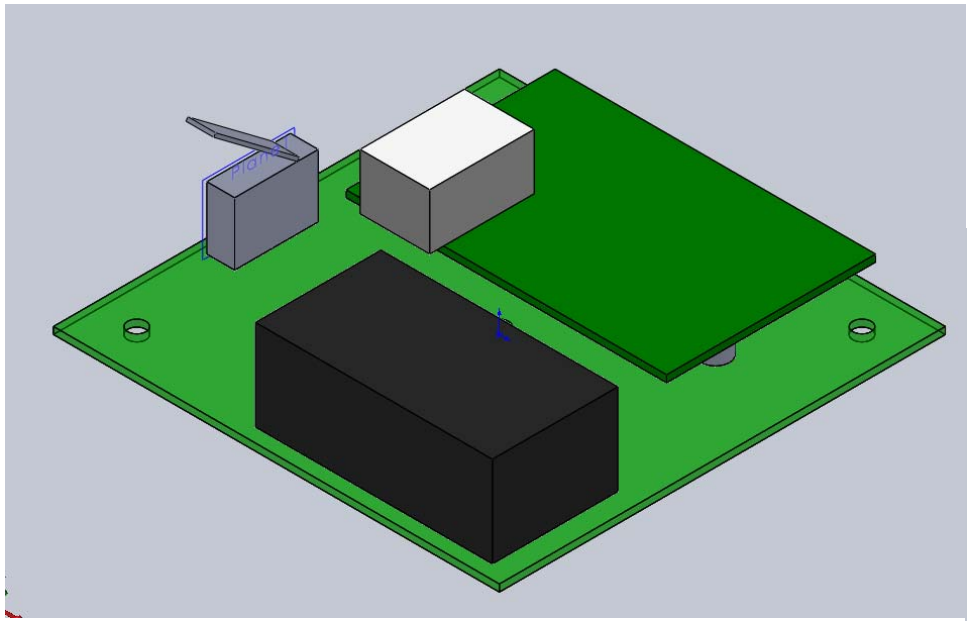

Major parts (Rabbit, Battery, G-switch)

BU Board on standoffs in canister for Team 5

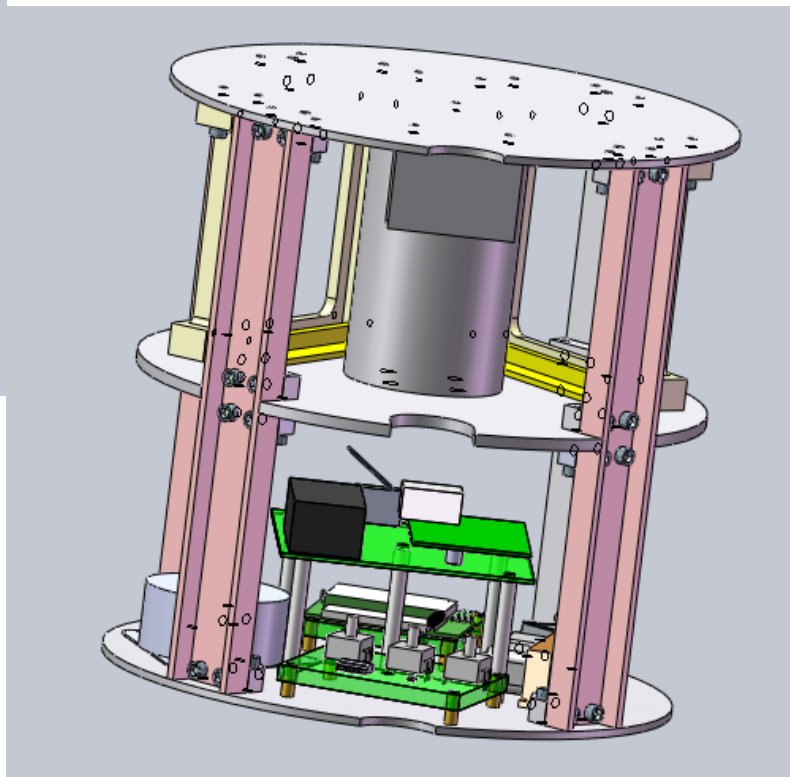

Testing of Board v1.

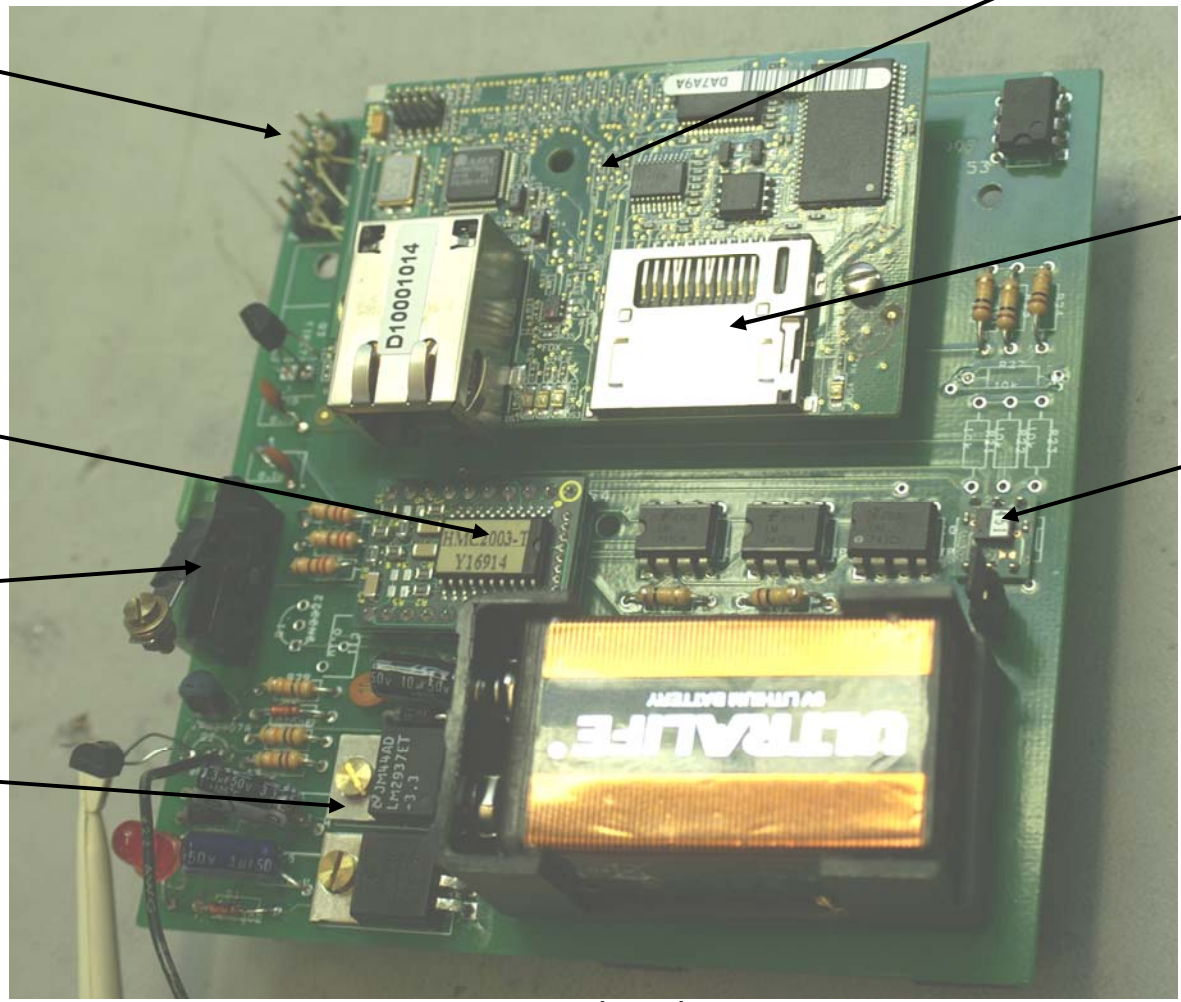

Mechanical Fit Test - to VT

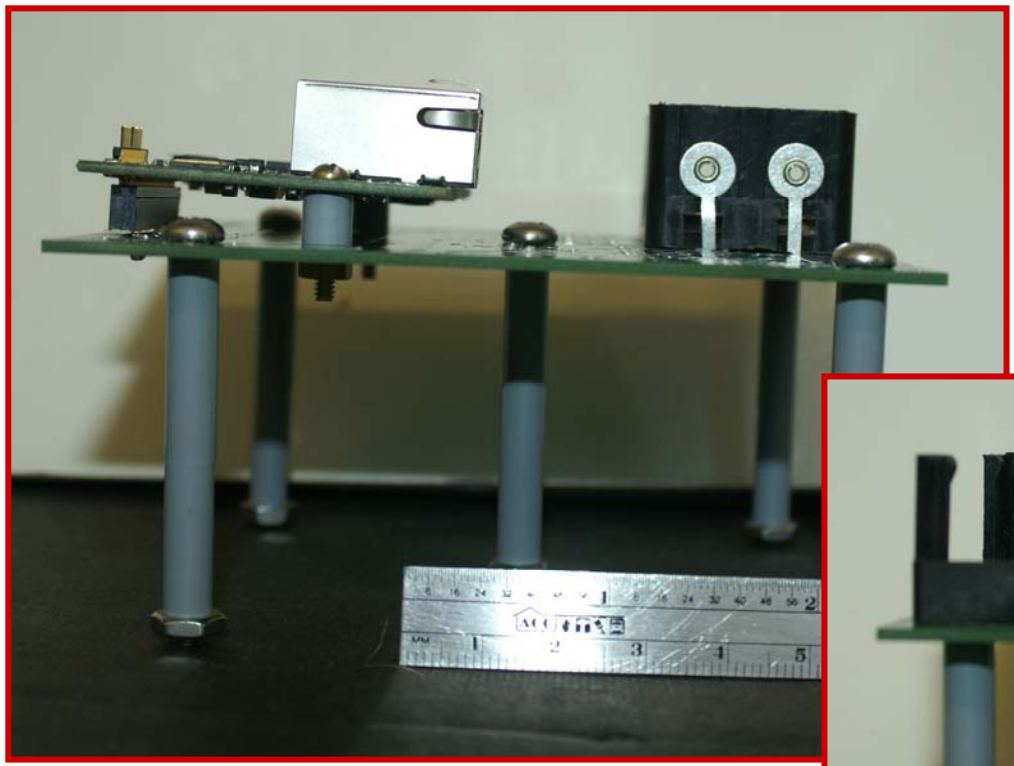

Standoffs with larger Components – side view

Standoffs with Rabbit Mockup – sent to VT

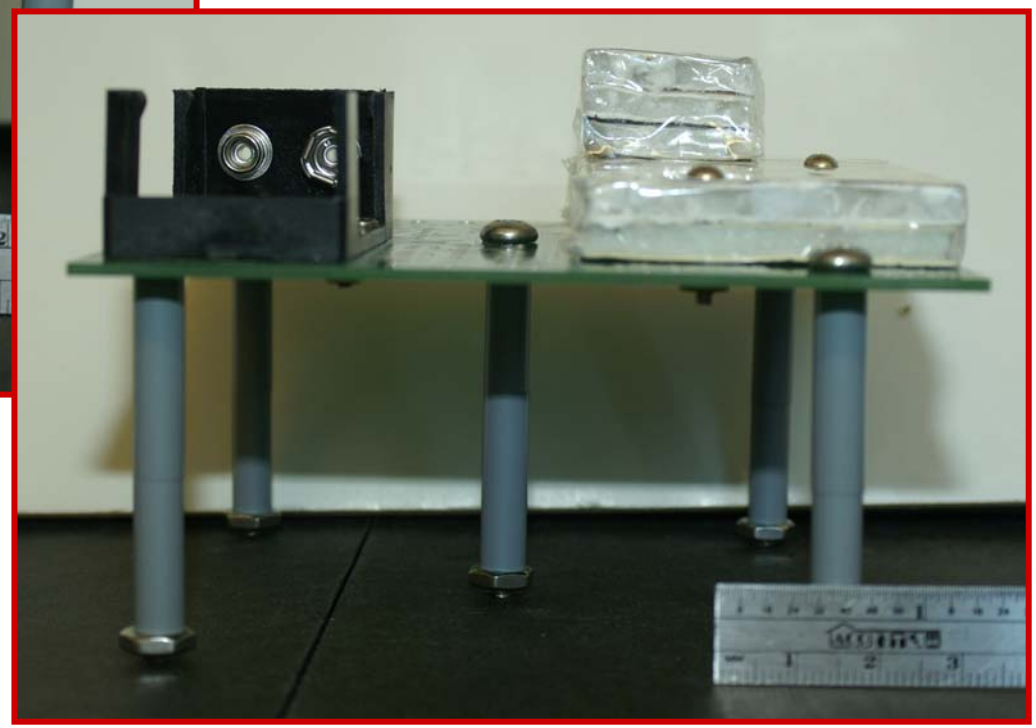

Testing Items Completed

- G-switch operates
- 5V and 3.3V regulated power
- Honeywell powered and axes respond
- Aichi powered and axes respond
- Amplifiers working
- Chip selects working
- Rabbit tested for flight almanac events
- Rabbit tested for Aichi chip select and axis select
- Rabbit reads A/D inputs
- Rabbit writes to SD card FAT system
- Coding completed

Day in Life Testing

- **Not completed in v1.0 board**
- Footprint errors on Rabbit pads prevented full hardware integration
- Tested all power, sensors, signals
- Tested Rabbit with wire-wrapped inputs
- G-switch operates correctly
- Chip selects operating
- 5 day board turnaround; 1 day assembly; 1 day testing – **June 11 or 12: final Day in Life Testing**